EXECUTION OF MARITIME PILOTAGE

[1]GEORGESCU STEFAN, [2]SIVRIU GEORGIANA, [3]ACOMI NICOLETA

[1.2.3]*Constanta Maritime University, Romania*

ABSTRACT

The essence of a good plan is knowing the limits within which the ship may be navigated in safety. The essential questions which the Navigating Officer must be able to answer at all times during a pilotage passage are:

Is the ship on track?

If not, where is the ship in relation to the track and what steps are being taken to regain it?

How close is the ship to danger?

How far is it to the next alteration of course?

Are the tidal streams and depths of water as predicted?

Keywords:. *headmark, marks, buoys*.

1. EXECUTION OF PILOTAGE

The essence of a good plan is knowing the limits within which the ship may be navigated in safety. The essential questions which the Navigating Officer must be able to answer at all times during a pilotage passage are:

Is the ship on track?

If not, where is the ship in relation to the track and what steps are being taken to regain it?

How close is the ship to danger?

How far is it to the next alteration of course?

Are the tidal streams and depths of water as predicted?

Organisation and records

A team effort is needed to execute a pilotage plan in safety; Table 1 is a recommended organisation for a 150m length ship. Other ships may need to modify this as necessary, dependent on the size of the ship and the team available.

The pilotage team should produce sufficient records for the ship's track to be accurately reconstructed, if required. The fixes and soundings taken through the passage should provide a series of confirmatory checks to support the visual picture and DR/EP times to support 'wheel over' bearings, etc.

Maintaining the track

An estimate of the distance off track may be made by looking along the desired bearing of the headmark and then making a direct assessment of how far the ship is

is '50 yards to *port* of track'. Remember that 1° off the track is equivalent to a distance of about 100 feet at 1 mile, ½ cable at 3 miles.

When running a mark on a cross-tidal stream, the course steered is bound to differ from the planned bearing of the mark. If the correct bearing is not being maintained, the ship is off track; it must be regained by a bold alteration. When the track has been regained, a course must be steered which will counteract the tidal stream more adequately than the original one.

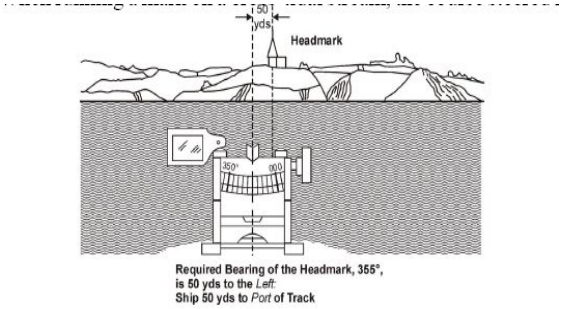

Fig. 1. Running a headmark: ship to port of track

Table 1. Pilotage organisation

CAPTAIN	In command, overall responsibility for ship safety.
NAVIGATING OFFICER (NO)	Acts as the pilot and takes over as necessary from the OOW. Executes the plan at the pelorus from the Note Book. Has ready access to the chart. Keeps the Captain fully informed on the progress of the plan. May take the bearings for his assistant to plot fixes on the chart.
OFFICER OF THE WATCH (OOW)	Filters shipping situation and informs Navigating Officer of ships which may hinder execution of the plan. Takes bearings and gyro checks as directed by the Navigating Officer. Runs the ship's routine and ceremonial and deals with matters of internal safety (of the ship). Maintains liaison with the blind safety team in the operations room.
NAVIGATING OFFICER'S ASSISTANT	Carries out the Navigating Officer's chartwork. Calls for fixes at regular and frequent intervals in order to confirm the ship's position and cross-checks the EP. Plots fixes and generates fresh DR and EP. Reports after each fix: its reliability: 'Good', 'Bad', or 'No fix' as the case may be; its distance from the planned track, and course required to regain; whether the echo sounder reports correlate with charted depth; ETA at next 'wheel over' position.
BLIND SAFETY OFFICER (BSO) AND BLIND SAFETY TEAM (*see* Chapter 15)	Monitors ship's position using blind pilotage techniques as a check on the ship's navigational safety; passes navigational and anti-collision information.
NAVIGATOR'S YEOMAN	Records wheel and engine orders. A tape recorder on the bridge may be found useful.
ECHO SOUNDER OPERATOR	Makes standard reports

Do not nibble at course corrections to maintain the track and avoid making successive alterations of 1° or 2°. Alter 10° or 15° to get back on the correct track quickly, but do not overshoot. Radar is often a useful aid in confirming whether the ship is on track or not.

Running a transit

The rule for running a transit is 'Follow the front mark'. In Fig. 3(b) the front mark (the beacon) is to *port* of the rear mark (the monument). Therefore the alteration of course to get back on track must also be to *port*.

If the transit is *astern*, the alteration must be in the *reverse* direction, e.g. in Fig. 3(b) the beacon is to the *left* of the monument, therefore the alteration must be to *starboard*.

Running a line of bearing

Altering course the wrong way when running a line of bearing is a frequent cause of mistakes in pilotage. This can be avoided by the following simple rules:

1. Look down the bearing on which the headmark should be.
2. The headmark will be: On the mark (Fig. 4) *or* to starboard of the bearing (Fig. 2) *or* to port of the bearing .
3. If the headmark is off the bearing, alter course in its direction: If the headmark is to *starboard* of the correct bearing alter course to *starboard* to regain track (Fig. 2).

If the headmark is to *port* of the correct bearing, alter course to *port* to regain track (Fig. 3).

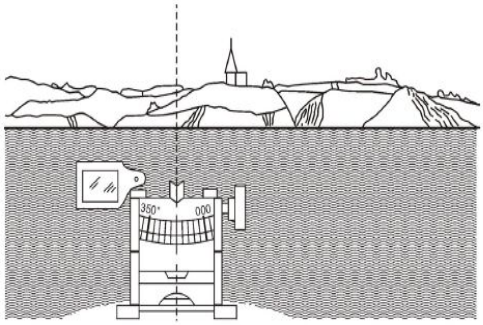

Fig. 2. Running a headmark: headmark to starboard of the correct bearing

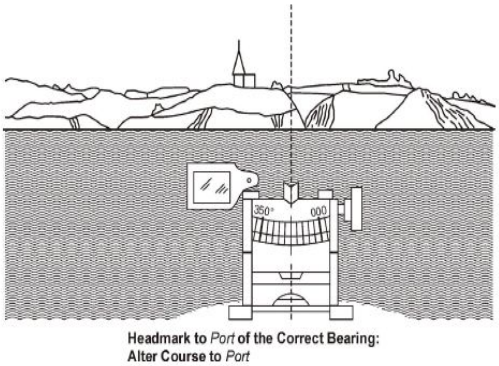

Fig. 3. Running a headmark: headmark to port of the correct bearing

If the mark is *astern* and the ship is running a *back bearing*, the alteration of course must be in the *reserve* direction; e.g. if the mark in is astern and appears to the right of the required bearing, the alteration of course must be to port; if the stern mark appears as shown in Fig. 4, the alteration required must be to starboard.

When the mark is on the correct bearing, note a point on the landscape which is in transit with it (either in front or behind). By using this transit, it is possible to see immediately without reference to the compass whether or not the ship is being set off line.

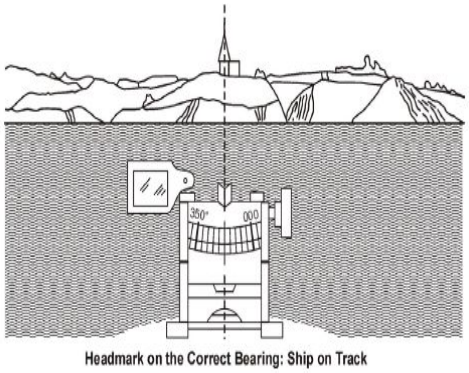

Fig. 4. Running a headmark: ship on track

Fix and run

Having chosen a suitable object on which to run, obtain another one in transit with it in precisely the same way as when running a line of bearing. Radar can often be of great assistance in confirming the track.

Assessment of danger

Always be alert to the nearest and most immediate danger. This could be a ship at anchor or a buoy towards which own ship is being set by wind or tidal stream. The most immediate danger could be a ship approaching down the next leg of the route which, if she does not alter course as expected, could present a collision risk.

The chart gives warning of navigational dangers but there are other hazards ships, yachts and small craft, emergencies such as steering gear or main machinery breakdown.

The navigator must be alert to all of these matters, and be constantly thinking ahead and anticipating possible eventualities.

Identification of marks

In pilotage work, there are two quick and simple methods immediately available for the identification of shore marks.

1. A straightforward comparison of the chart with what is actually visible.

Such a comparison will frequently reveal the marks to be used, without having to take a single bearing. If there is any possibility of confusion between adjacent marks (such as churches, chimneys, blocks of flats, etc.) this may have to be clarified by taking bearings.

2. Identification by means of the transits which shore marks make with the buoys marking the channel. Even if a buoy differs from its charted position by as much as 100 yards, the expected bearing of the mark to be identified will probably not vary by more than 2° or 3°; this is usually sufficient for identification purposes.

Buoys or beacons can be identified by combining single visual bearing with a radar range of the mark.

Shipping

When altering course for shipping, take the necessary action in plenty of time.
If action is delayed, the Officer of the Watch in the other ship may become alarmed and may do something unexpected and dangerous.
Do not pass too close across the bow (upstream) of anchored shipping; if possible, pass astern. The position of ships at anchor near own ship's track can be established by combining a fix with a visual bearing and radar range of the ship at anchor. With the position of the other ship on the chart, a decision can then be made to pass ahead or astern, or take some alternative action such as stopping if, for example, the anchored ship is blocking the channel.

Use of the echo sounder

The intelligent use of the echo sounder is essential to the safe conduct of pilotage. The predicted height of tide must be taken into account at all times.
Reports from the echo sounder operator or the reading on the bridge display unit must be given proper attention. If the reported depths are different from those predicted, the reasons must be considered and the appropriate action taken, particularly if the depths are close to the limiting depth. It may be necessary to stop the ship and clarify the situation before proceeding further.

Altering course and speed

When turning on to a new headmark, the wheel must be put over in plenty of time. If it is put over too soon, it can be quickly eased; if it is put over too late, more wheel may not be effective.
The use of excessive wheel may bring the ends of the ship closer to the clearing bearing than planned. Excessive wheel also reduces ship's speed more than originally intended and this may create problems particularly in strong winds or when in company with other ships.
When about to turn, make sure that the ship is not tending to swing in the opposite direction to that intended. Keep the bows in hand ('smell' the turn) by using small amounts of wheel in the appropriate direction just before the turn, so that the ship 'wants to go the desired way as soon as the wheel is put over for the turn itself. When making a large turn in a big ship, it is often advisable to use plenty of wheel initially to get the ship swinging in the right direction and then ease the wheel, otherwise the ship may 'hang' in the original direction, particularly in shallow water or when turning out of wind.
Remember that, as a general rule, ships going ahead turn more easily into wind than away from it, and allowance should be made for this.
Watch the progress of the ship during the turn to ensure that the planned track is being followed.
Are objects coming up ahead on the right bearing? Does the turn look right? This is particularly important with large turns in big ships.
The monitoring of a large turn is illustrated in Fig. 5.

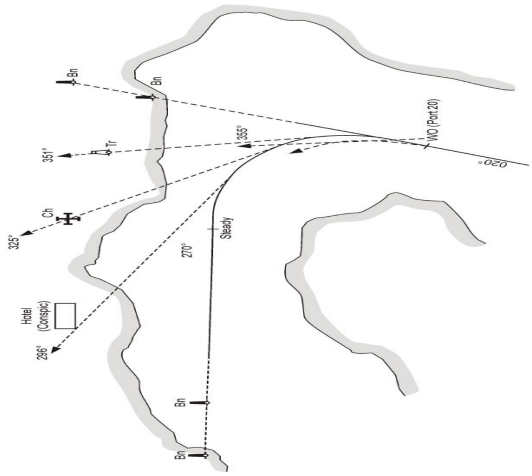

Fig. 5. Monitoring a large turn in pilotage waters

A ship entering harbour on a course of 020° is required to turn 110° to port to the next leg (270°). The courses of 020° and 270° both run on a pair of beacons in transit.
The track of the ship between 'wheel over' and steady is plotted using the ship's turning data. It will be seen that, once the turn has begun, the tower should come up *right ahead* on a bearing of 351°, the church on 325° and the of the hotel (conspic) on 296°, as the ship's head swings through those particular bearings. If these bearings do not come up right ahead, the rate of turn must be adjusted.
For example if, in the early part of the turn, the tower comes up right ahead on a bearing of 355°, the ship is to port of track, and is turning too fast. The wheel must be eased to bring the ship back on to track.
Before altering course, check to see that the track is clear of shipping and other obstructions. Look out on the appropriate quarter for any ship overtaking from that direction.
Always check that the wheel is put over the right way by watching the rudder angle indicator. If the wheel is put the wrong way, order 'Midships' and repeat the original order.
When altering speed, check from the shaft speed indicators or the pitch angle repeaters that speed has been altered correctly. If the shafts have been put the wrong way (e.g. astern instead of ahead), order 'Stop' and repeat the original order.
In ships where the Quartermaster is sited at the QM's console on the bridge, it is important that the above procedure should be followed and that all conning orders and replies are made in a formal manner.

Buoys

Buoys are an essential aid in pilotage, especially in narrow channels, but their positions can vary from that charted with the state of the tide. Buoys can drag, particularly if in an exposed position; they can also be repositioned to mark an extending shoal or altered channel, without immediate notification.
Use but do not trust buoys implicitly. Check the characteristics by night, and the name, number, colour or

topmark by day. Fix from charted shore objects in preference to buoys, using the EP as a check. Take care in areas where it is known that channels shift and the buoys are repositioned accordingly. The charts and *Sailing Directions* may give warning of such areas, for example the channels in the vicinity of the Goodwin Sands and in the Thames Estuary.
When passing a buoy, its position may be checked by transits with two, preferably three, charted shore marks. Radar can help in the identification of buoys and in checking their positions.
Take care if the planned track leads the 'wrong side' of a buoy marking the leg of the channel, e.g. the deep-draught route for heavy ships approaching Smeaton Pass (Fig. 11) from Plymouth Sound which leads east of the West Mallard Buoy. It may on occasion, for example in strong winds, be preferable to aim off 2° or 3° as necessary to get the buoy on the 'correct' bow. Otherwise the ship could be set dangerously close to the buoy concerned if she is slow to turn.
The height of the tide may permit a ship to pass outside the line of buoys yet still be safe. A ship may be forced the wrong side of a buoy by other shipping. It may be better to take this course if collision cannot otherwise be avoided. In certain circumstances, it may even be better to ground than risk a collision.

Tides, tidal streams and wind

For a number of reasons, the predicted height of tide may be different from that actually experienced, perhaps by as much as 1 or even 2 metres. This is particularly dependent on the weather.
Tidal streams experienced may not always agree with the predictions, particularly at springs, and the actual time of a change of direction can be as much as 1 to 2 hours different. Always check the direction and rate by noting the heading of the ships at anchor and the wash of the tidal stream past moored objects such as buoys.
The eye tends to deceive; the actual strength of the stream in knots is not always as great as it appears to be.
Make an adequate allowance for cross-tidal stream and wind, because it is difficult to recover the track having been set downstream of it, especially when speed is reduced. The less the distance to the next 'wheel over' position, the larger must be the correction to regain track. If the ship is upstream of the line, there is no difficulty in regaining it.
An adequate allowance must be made for tidal streams and wind when turning; the 'wheel over' point may have to be adjusted. Wind direction and strength affect not only the leeway but also the turning circle itself. A turn may have to be started early or late, using more or less wheel as appropriate, depending on the combined effects of stream and leeway on the turning circle.

Service to the Command

The Navigating Officer must anticipate the Captain's requirements and provide him with relevant information and situation report. Such information should include:

The headmark and its correct bearing.
Whether on or off track. If off track, by how much, and the course required to regain.
Distance and time to 'wheel over'.
The minimum depth expected.
The tidal stream and the likely effect of wind.
Advice on the shipping situation.

Action on making a mistake

If a mistake has been made, report it immediately. If this leads to uncertainty about the ship's position, consider stopping the ship at once. The Navigating Officer must always be scrupulously honest and never try to bluff his way out of an uncertain situation. His Captain may not find him out, but the rocks and shoals will.

Checks before departure or arrival

Always observe the situation in the vicinity of the ship before leaving harbour. If alongside, the best way is to walk down the jetty checking the catamarans, the positions of adjacent ships, etc. The actual height of tide, the strength and direction of the tidal stream and the wind can be noted, and all these may lead to an adjustment of the plan.
Such a detailed check cannot be done on entering harbour, but the situation needs to be observed as accurately as possible.

2. CONCLUSIONS

The pilotage plan must be complete in every detail. Pre-planned data are essential for a passage in confined waters. The track must be drawn on the chart, using headmarks, if possible. The position along the track must be instantaneously available from cross bearings. The safe limits each side of the track must be defined by clearing bearings. With appropriate details transcribed into a properly prepared Note Book, the Navigating Officer can give his whole attention to the conning and safety of the ship without having to consult the chart. Reports from the navigator's assistant, the echo sounder operator, the blind (safety) and/or visual fixing teams, serve to confirm (or deny) the accuracy of the navigation. If time has to be spent poring over the charts and publications during pilotage instead of conning the ship, it will be evident either that the plan has not been fully prepared, or that the Navigating Officer does not have confidence in it.
The plan must be so organised that, at each stage, the Navigating Officer recognises those factors demanding his attention with sufficient time to deal with them. For example, the plan will need to include the selection of 'wheel over' points and the observation of transits to determine the gyro error.
Neither of these operations should interfere with the other. These points concern the execution of the plan rather than the planning, but consideration of such details at the planning stage will ensure a sounder plan, simpler to execute.

3. REFERENCES

[1] NAUTICAL INSTITUTE, Admiralty manual of navigation, vol. I - *The principles of navigation*, 2008
[2] COJOCARU, S - *Tratat de navigație maritimă*, editura ARSS Academica Bucuresti, 2008
[3] BALABAN, GH. I- *Tratat de navigație maritimă*